C391-E101A

SHIMADZU
Excellence in Science

Transportable NOx-O_2 Analyzer

NOA-7100

All-in-One Measure

The portable all-in-one NOx-O_2 analyzer can be used for various purposes a variety of uses in various locations.

ment


SHIMADZU
MEASURING
10(OCT)-07-2024 11:30
NOx (25.00)
ppm
O2 (25.00)
vol%
SEL+
SEL-
ENTER
RANGE
REC
CAL
MEAS
SAMPLE
AIR
MAINT
LCD
F1
F2
F3
F4
NOA-7100
SMPL FLOW
AIR FLOW
STD
SMPL
STD
SMPL

Designed for Easy Operations

Offering the same accuracy, reliability, and ease of maintenance of the proven previous model, the NOA-7000 also provides support for USB flash drives, and wired and wireless data transmission. It maintains an abundance of features such as NOx conversion operation, mobile average output, and response speed switching, plus easy, more convenient operation.

Perfect for On-Site Measurements

All-in-One & Transportable

All pretreatment parts required for measurement, such as the pump, filter, and electric cooler, are built-in. Gas concentration can be measured by simply introducing sample gas to the sample gas inlet port.

Recessed handle

Designed for Easy Maintenance

Consumables such as filters and the absorber are located at the front of the instrument to facilitate replacement.

Filter and absorber

Smooth Operability

Front Controls

The NOA-7000 adopts easy-to-use screen configurations and key operations from preceding models. The monitor can display measurement values and trend data for up to three constituents. Gas switching, flow rate adjustment, and gas connection are controlled on the front of the instrument to facilitate operation.

Output Data to USB Flash Drives

Outputting Data to USB Flash Drives
Measurement data is stored in the built-in memory of the analyzer. Data can be retrieved in CSV file format using USB flash drives. This facilitates data processing on a computer.
(Measurement data can be retrieved via Wi-Fi connection or LAN cable connection.)

Data Confirmation On Easy-to-Understand Screen

Wireless Data Communication

Wi-Fi wireless data transmission is now available. It is now possible to monitor measurement values and acquire data using a smart device or computer equipped with Wi-Fi. This eliminates the need to bring a recorder to the measurement site or to make wired connections, and enables analysis while taking measurements.

Trend display

Data Monitoring From a Remote Location

LAN Cable Connection

LAN connection enables users to check measurement values and variations in concentration. It is possible to access measurement data via the intranet even when not in the office or laboratory.

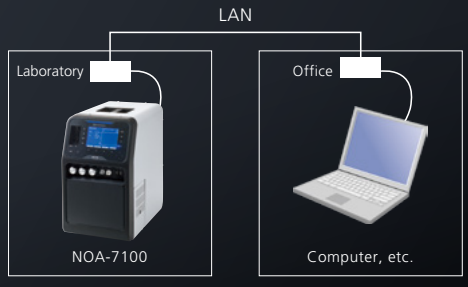

Supporting NO and NO_2 Measurement

Mounting special accessories, such as the NOx-NO switching solenoid valve set, enables users to measure NO by bypassing the NO_2 converter. It is also possible to measure the NO_2 concentration by calculation (NOx-NO). Simultaneous display of nitrogen oxides (NOx), NO, and NO_2, and parallel outputs are also supported.

Principle of Chemiluminescence

If NO (nitrogen monoxide) gas and O_3 (ozone) gas come in contact with each other, NO is oxidized, producing NO_2 (nitrogen dioxide) gas. As shown in the figure on the right, the NO_2 concentration is measured by detecting light emitted from NO_2 gas by a sensor. The chemiluminescence method has been adopted for a large number of NOx analyzers because it offers excellent linearity and sensitivity with less interference.

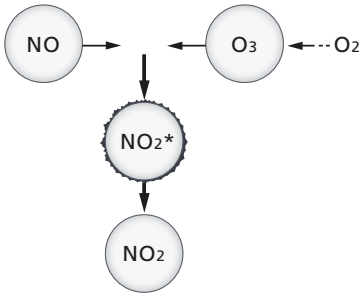

Principle of chemiluminescence

Offers NOx measurements for applications ranging from exhaust gas measurement of combustion equipment to combustion and denitrification research.

The NOA-7100 supports eight ranges of NOx measurements, from 25 ppm to 4000 ppm.

Type 1

Main Application	Measurement Components	Measurement Range	Configuration
Combustion Equipment Test / Research 	NOx O_2	NOx: 0 – 25/50/100/250/500/1000/2500/4000 ppm O_2: 0 – 5/10/25 vol%	 •NOA-7100 •Drain separator

A drain separator set is provided as standard with Type 1.

Both 100 ml/min small flow measurement and NO/NO_2 measurement are available.

It also supports measurement of miniscule sample gas flow rate of 100 mL/min, and is able to measure limited sample gas flow rate for applications such as catalyst research. The NO_2-converter bypass feature also enables NO measurement.
NO_2 concentration can also be measured by calculation (NOx-NO).

Type 2

Main Application	Measurement Components	Measurement Range	Configuration
Catalyst research 	NOx NO NO_2	Nox, NO_2 0 – 100/250/500/1000/2500/4000 ppm	 •NOA-7100 (Small flow rate set)

A drain separator is not provided with Type 2.

Same Simple Flow Configuration as Previous Models

Because there are fewer moving parts, the flow is simple with less room for problems.

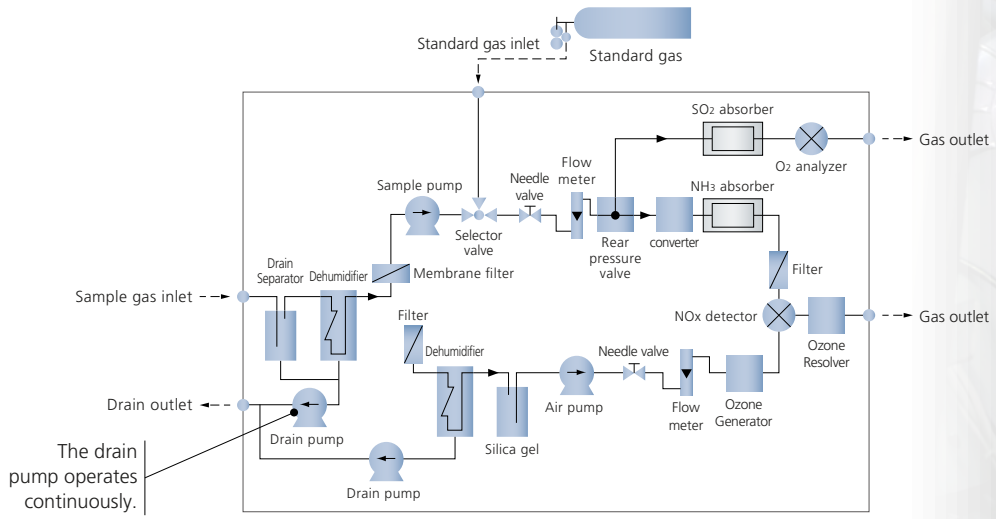

In the case of standard flow

Timer Automatically Discharges Drainage Liquid

Sample gas is dehumidified by the built-in cooler unit, and the drainage liquid is automatically eliminated by a roller pump operating intermittently at the frequency set on the screen.

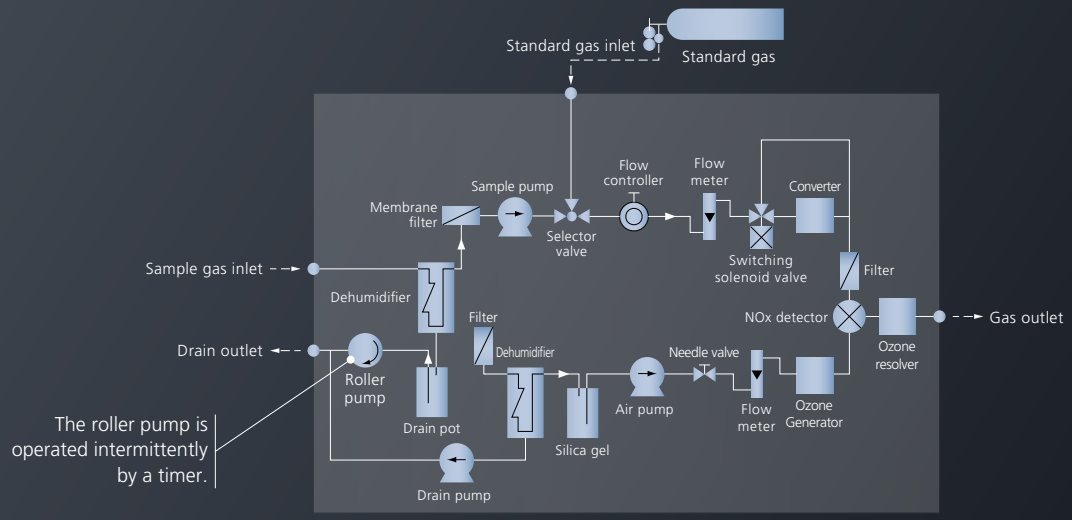

In the case of small flow

Specifications

Standard type

Two standard types are available.

	Type 1	Type 2
Measurement components	NOx, O_2	NOx, NO, NO_2 (*1)
Measurement range	NOx: 0-25/50/100/250/500/1000/2500/4000 ppm O_2: 0-5/10/25 vol%	NOx, NO, NO_2: 0-100/250/500/1000/2500/4000 ppm (*2)
Measurement principle	NOx: Atmospheric pressure chemiluminescence method; O_2: Limiting current type zirconia method	
Repeatability	Within ±0.5% of full scale	
Zero drift	Within ±1% of full scale per day (25 ppm range: within ±1.5% of full scale per day)	
Span drift	Within ±1.5% of full scale per day	
Linearity	Within ±2% of full scale	
Response time (*3)	NOx: Approx. 20/30/60 sec (Switching is configurable.) O_2: Approx. 30/60 sec (Switching is configurable.)	NOx/NO: Within 90 sec
Gas sample amount	Approx. 2 L/min	100 mL/min
Display	Liquid crystal display, able to display 3 items at a time	
Transmission output	0-1VDC, 3 channels, insulated output (individual channels not insulated)	
Wireless data transmission	Equipped	
Data output to external media (*4)	Measurement data stored in the internal memory of the analyzer can be written to USB flash drives in CSV file format; can also be output to a computer via Wi-Fi or LAN cable connection.	
Permissible ambient temperature (*5)	5-40°C; must not be exposed to direct sunlight or radiant heat	
Permissible ambient humidity (*5).	Relative humidity 90%RH or less	
Power requirements	Choose from 110, 115, 120, 127, 220, 230, 240 VAC 50-60 Hz, 100 V series: 410 VA, 200 V series: 700 VA (steady 200 VA)	
Dimensions	W260 × H452 × D420 mm (does not include protrusions)	
Weight (analyzer)	Approx. 16 kg	
External drain separator	Fitted	Not fitted
Sample gas conditions (*6)	[At NOA-7100 inlet port] Pressure: -980 to + 980 Pa; Temperature: Ambient temperature; Dust: 0.1 g/Nm^3 or less	
External signal input	0-1VDC, 1 channel, Signal input from an external analyzer, display (Data can be saved)	

The following specifications are the same as for the standard model.
Display, transmission output, permissible ambient temperature, permissible ambient humidity, power requirements, dimensions, weight (body), sample gas conditions, external signal input

*1: NO_2 is measured by calculation (NOx-NO).
*2: NOx, NO and NO_2 are in the same range. The maximum NO_2 concentration is 300 ppm.
*3: Time that indicates 90% response from gas flowing from sample gas inlet (flowing gas switching time + electrical system response time).
With Type 2, this will be the response when NOx-NO switching is fixed.
*4: Check the Shimadzu website for smart devices and USB flash drives for which operation has been confirmed.
*5: Permissible ambient temperature and humidity are indicated by the shaded part of the figure.
*6: Sample gas conditions and coexisting gases are summarized below. Please contact your Shimadzu representative if the conditions are not satisfied.

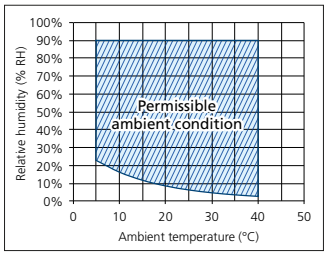

Special specifications

In addition to the standard model, it is possible to specify constituents, and if the small flow rate set, communication set, or NOx-NO switching solenoid valve set is provided.

Measurement components	1 constituent (NOx) or 2 constituents (NOx, O_2) (*6) O_2 cannot be measured if small flow rate set is selected. See small flow rate set page. NO and NO_2 can be measured as well as NOx if NOx-NO switching solenoid valve set is selected. See NOx-NO switching solenoid valve set page.
Measurement range	NOx: 0-25/50/100/250/500/1000/2500/4000 ppm O_2: 0-5/10/25vol% NOx measurement range differs if small flow rate set is selected. See small flow rate set page.

Small flow rate set	Not fitted	Fitted
Response time (*3)	NOx: Approx. 20/30/60 sec (Switching is configurable.) O_2: Approx. 30/60 sec (Switching is configurable.)	NOx: Within 90 sec
Gas sample amount	Approx. 2 L/min	100 mL/min
Repeatability	Within ±0.5% of full scale	
Span drift	Within ±1.5% of full scale	
Measurement components	NOx or NOx/O_2	NOx
	NO and NO_2 (*1) can be measured as well as NOx if NOx-NO switching solenoid valve set is selected.	
Measurement range	NOx: 0-25/50/100/250/500/1000/2500/4000 ppm O_2: 0-5/10/25 vol%	NOx: 0-100/250/500/1000/2500/4000 ppm

Communication set	Not fitted	Fitted
Wireless data transmission	Not equipped	Equipped
Data output to external media (*4)	Not equipped	Measurement data stored in the internal memory of the analyzer can be output to USB flash drives in CSV file format; can also be output to a computer via Wi-Fi or LAN cable connection.

NOx-NO switching solenoid valve set	Not fitted	Fitted
Measurement components	NOx	NOx, NO, NO_2 (*1)

This special accessory switches the flow path inside the analyzer between a path that flows through the converter (NOx flow path) and one that does not flow through the converter (NO path).
The switch cycle is selectable from auto (configurable from 1 to 99 minutes), manual, and fixed. If there is significant variation over time in concentrations of NOx, NO, or NO_2 relative to the switching cycle, NO_2 concentration measurement accuracy diminishes.

Coexisting gas conditions

Coexisting gases	NOx, NO, NO_2 measurement	O_2 measurement
CO	-	Less than 1 vol%
CO_2	30 vol% or less	Less than 30 vol%
Hydrocarbon	-	Less than 1 vol%
NO_2	300 ppm or less	
N_2O	-	Must not be contained
H_2O	Ambient temperature saturation not exceeded	Ambient temperature saturation not exceeded
NH_3	20 ppm or less	
SO_2	1000 ppm or less	1000 ppm or less (SO_2 absorber replacement cycles varies according to concentration of SO_2 in the sample gas)
SO_3	50 ppm or less	Must not be contained
Cl_2	Must not be contained	
HCl	Must not be contained	
HF	Must not be contained	
Other flammable gases	Must not be contained	Less than 1 vol%
Other corrosive gases	Must not be contained	

Note 1. Explosive gas (combustible gas and oxygen gas mixture in explosion range) cannot be measured.
Note 2. O_2: O_2 measurement cannot be added if 1 vol% or less or if CFCs and H_2S are included. Conditions for 1%FS or less if interference impact of O_2 measurement is minimal (5 vol% O_2) are as follows:
CO: 1000 ppm or less, CH_4: 250 ppm or less, NO: 800 ppm or less
Note 3. Since NOx and O_2 have interference on CO_2 in the sample gas, the analyzer is equipped with a feature to reduce interference by setting CO_2 concentration in the sample gas to the analyzer.

Special accessories

External drain separator

Placed at the side of the NOA-7100, this is used to remove drainage liquid that forms from sample gas. A drain separator set is provided as standard with Type 1 and the CFP-8000.
P/N: 638-93218-91

Sampling probe (with heater) GSP-100

P/N: 630-08284
Pipe specification: SUS-304, insertion length 700 to 740 mm
(Up to 1340 mm can be added)
Maximum operating temperature: 400°C
Transformer (option) is necessary.

Sampling probe

Convenient for sampling gas from indoor experimental reactors, etc.
P/N: 638-93071-01
Pipe material and insert length: SUS, 300 mm or less
Maximum operating temperature: 150°C
Conduit material and length: PTFE tube, ø6 × ø8, L=5 m

Gas conduit

Conduit that connects the probe to the NOA-7100, and the standard gas cylinder with the NOA-7100

P/N	Specifications	Note
016-37519	PTFE tube, ø6×ø8 mm	For probe
016-37517	PTFE tube, ø4×ø6 mm	For standard gas cylinders

Signal input cable

Used to input signal from external analysis to the NOA-7100.

P/N	Specifications
638-75038-91	Arrow clip terminal type
638-75038-92	Plug terminal type

PC recorder

Analog signals from the NOA-7100 and other analyzers can be loaded to a PC simultaneously.
P/N: 638-77195-02

Carrier case

Aluminum carrier case for the NOA-7100.
P/N: 631-90259

CFP-8000 pretreatment unit

Used in combination with the NOA-7100 to perform continuous gas measurements. The unit is equipped with a built-in cooler, filters, pump, and flow meter, and enables users to send gas from which dust and moisture have been removed to analyzers in two lines.
Note: The drain separator set is built the CFP-8000.

Intended use	Air and other gas samples
Permissible ambient temperature	5 to 40°C
Sampling quantity	Approx. 5 L/min (maximum)
Filter performance	Collection efficiency of at least 99.9% for particles 0.3 µm in diameter
Materials for gas connection parts	Hard glass, rigid PVC, PTFE, fluorocarbon rubber etc.
Gas drain interface	Sample gas and drain port, 8 mm diameter hose end Calibration gas inlet, 6 mm hose end
Power requirements	110/115/120/127/220/230/240 VAC
Weight	Approx. 12 kg
Pump performance (at 50 Hz)	No-load flow rate 5 L/min
Measurement gas conditions	Temperature : Ambient temperature (at external drain separator inlet) Pressure: ±980 Pa Dust: 0.1 g/Nm^3 or less. Must not contain special gases (Cl_2, HF, etc.) that may affect gas connection parts.

External dimensions

(Unit: mm)

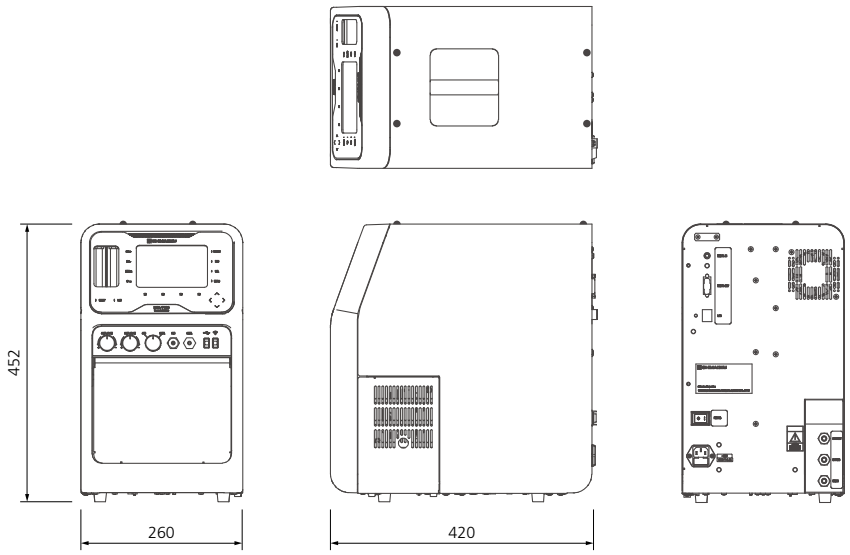

(Does not include protrusions)

Installation space

(Unit: mm)

Combination with CFP-8000

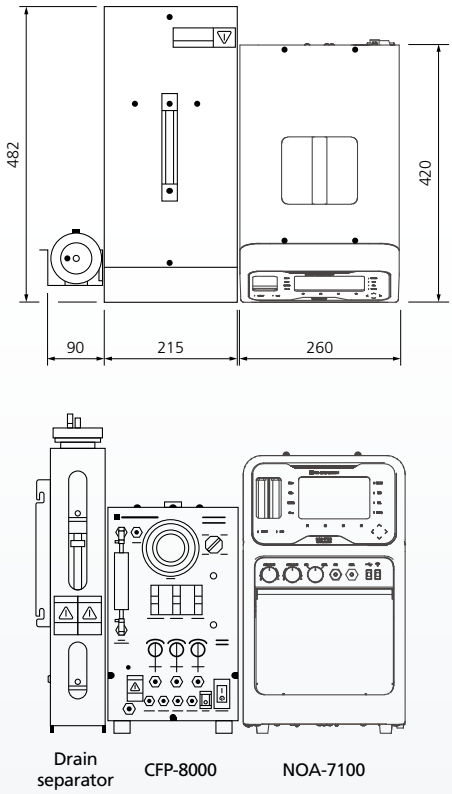

Combination with drain separator set

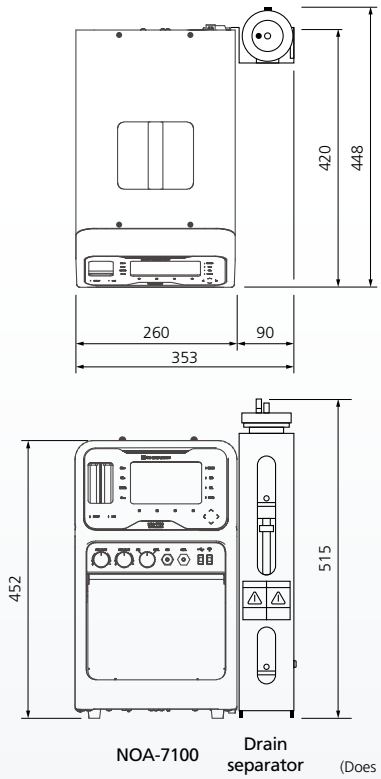

(Does not include protrusions)

CAUTION

- This product does not incorporate any special measures for dealing with leakages of hazardous or flammable gases, in the unlikely event that such situations are encountered. Appropriate measures, such as providing adequate ventilation in the vicinity of this product, must be taken if hazardous or flammable gases are to be measured. This product is not designed to be explosion resistant. It must not be used in dangerous locations, nor should it be used to measure explosive gases.
- Make sure to read the Instruction Manual before using this product.

"Wi-Fi" is a registered trademark of the Wi-Fi Alliance.

Shimadzu Corporation
www.shimadzu.com/an/